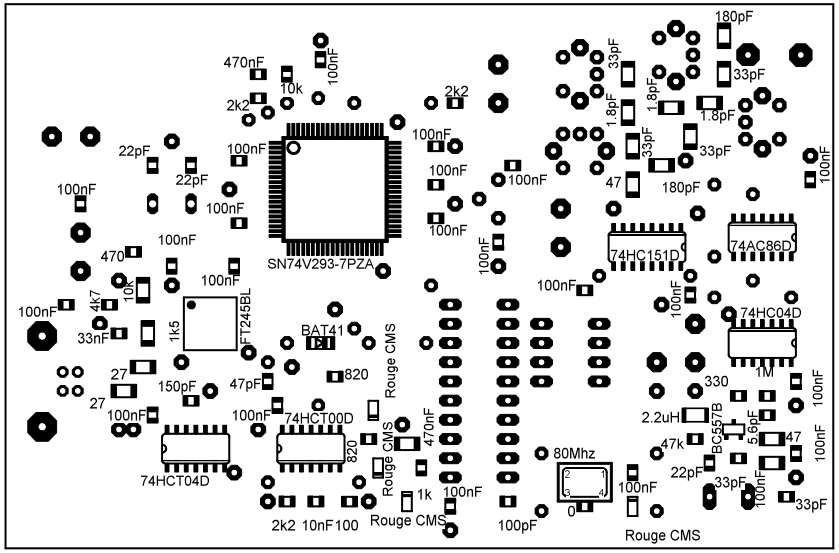
SN74V293-7PZA
FT245BL
74HCT04D
74HCT00D
74HC151D
74AC86D
74HC04D
BAT41
80Mhz
BC557B
470nF
100nF
10k
2k2
22pF
470
4k7
33nF
1k5
27
150pF
47pF
820
Rouge CMS
1k
100pF
0
180pF
33pF
1.8pF
47
1M
330
2.2uH
47k
5.6pF
10nF
100